GROVE	BESCHILDERUNG ENGLAND FAHRERHAUS SIGNS AND SYMBOLS ENGLAND DRIVERS CAB	BILDTAFEL PICTORIAL DISPLAY			GMK3060
		02.17	3165604-ETL A	1/1	

2

ATTENTION
Steerable only with running motor.

4

WARNING
BEFORE WELDING ON THIS CRANE

1. STOP ENGINE
2. ISOLATE BATTERY
3. DISCONNECT TWO TRANSDUCERS ON BOOM LIFT CYLINDER
4. REMOVE PLUG TRANSMISSION CONTROL ELECTRONICS
5. REMOVE EARTH CABLE FROM GENERATOR
6. CONNECT EARTH CABLE DURING WELDING WITHIN WELDING AREA (MAX 1m DISTANCE)

POSSIBLE DAMAGE MAY OTHERWISE OCCUR

5

SLOW SPEED OR STATIC STEERING ON JOB SITE IS RECOMMENDED ONLY WITH THE STEERING SYSTEM UNLOCKED

1

ATTENTION
Wheel nuts and bolts are seated correctly after the first driven journey.
For this reason wheel nuts must be retightened.
Possible future complaints regarding loose wheel nuts can not be recognised.

7

Special Types Use

Manitowoc Crane Group Germany GmbH

	Tyre size		
STGO	Axle loads	Speed	Speed

The table gives the maximum permitted . . .

6

CAUTION DURING WELDING

This vehicle is equipped with:
Polyamide (PA)®
PIPE LINES
made of polyamide 12
CAUTION DURING WELDING
Protect pipes from heat (sparks, flames, welding beads).
Permissible continuous temperature: +100°C.
Permissible temperature without operation pressure: +130°C for 60 min.

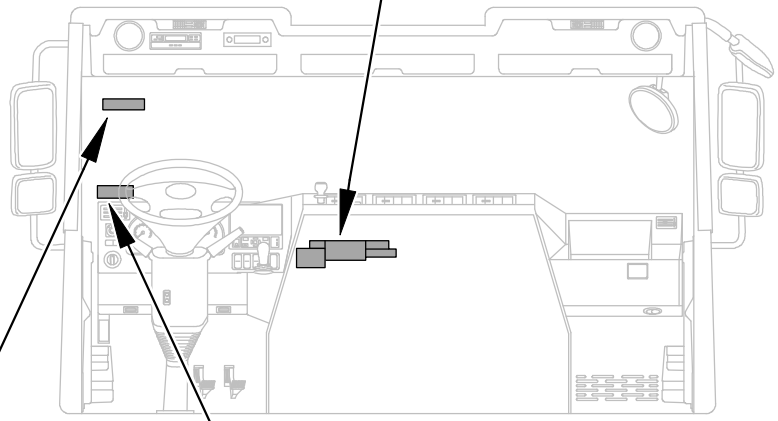

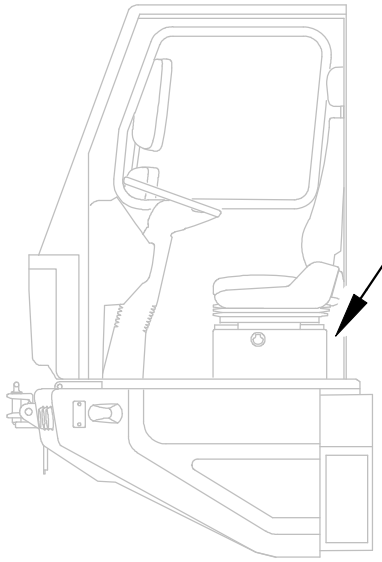

MAX. HEIGHT 3,75 M

8

When leaving the crane cab, set the parking brake

3

3165604-A-BL01-0217-0000